加工精度	

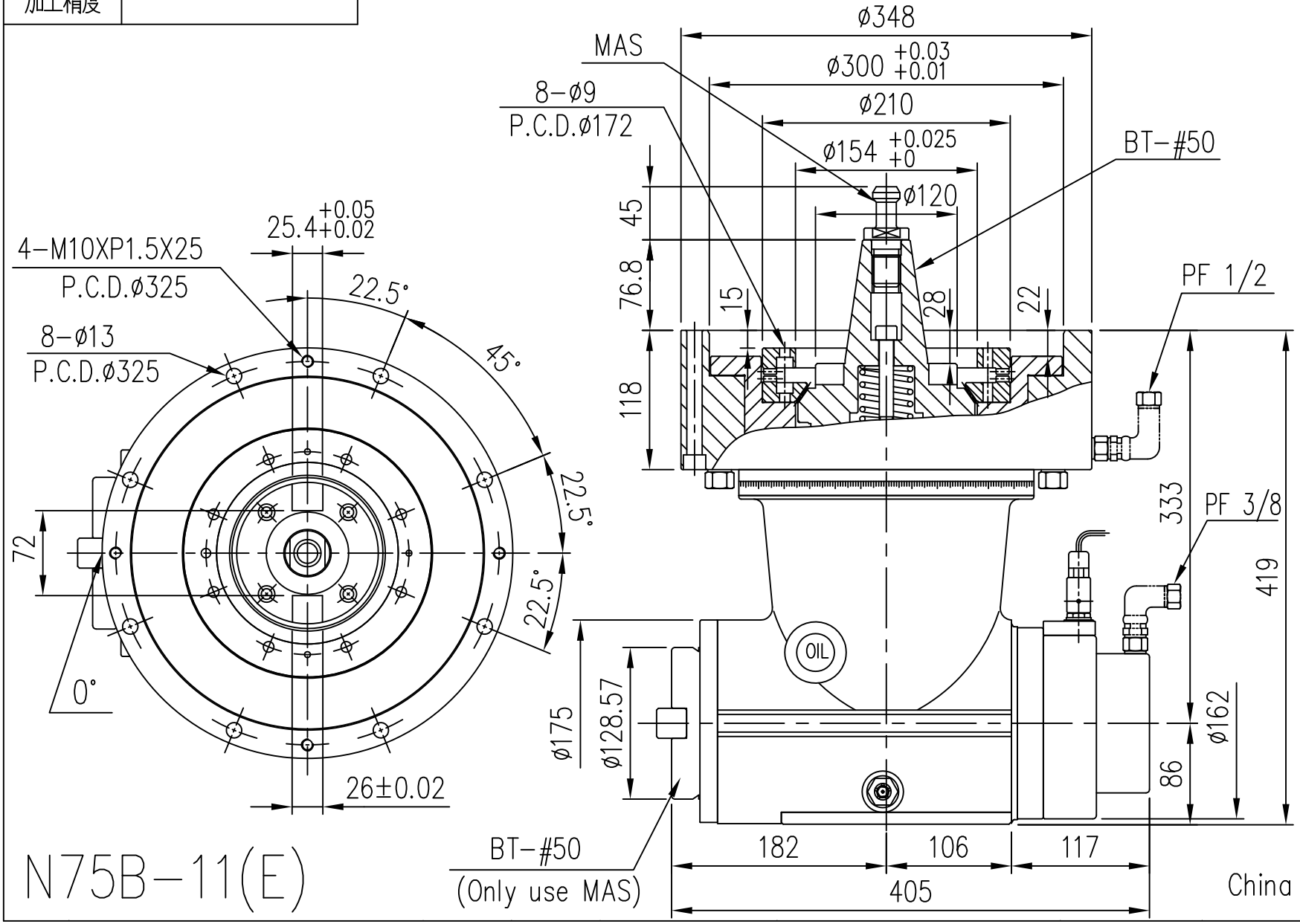

Max Cutter Dia	ø150
Reduction Ratio	1 : 1
Max Torque	1200N.m
Max Power	38kw
Max Revolving	2000rpm
Spindle Steering	Right Turn
Hydraulic tool release	
Pull cutter power	about 1 ton
Cutter Max Weight	10kg
Cutter Lenght	150mm
Hydraulic Pressure	35-40 kg/cm²
Conical teeth positioning	
Rotate angular 180° rotate	5° of one graduation
Teeth tight Hydraulic Pressure	
35-40 kg/cm²	

- Auto Draw Bar
- Auto Rotate angular

N75B-11(E)

Patent by :
Taiwan No. I 232788
China No. ZL 2004 2 0003767.1