加工精度	

Pull Stud Select		
		BT(M24X3.0)
		NT(M24X3.0)
		NT(1")

Max. Cutter Dia	ø150(6")
Max. Torque	1200N.m
Max. Power	63kw
Max. Revolving	2000rpm
Main Spindle Steering	Right Turn
Accessories : T-Screw x6 M18XP2.5X87L	

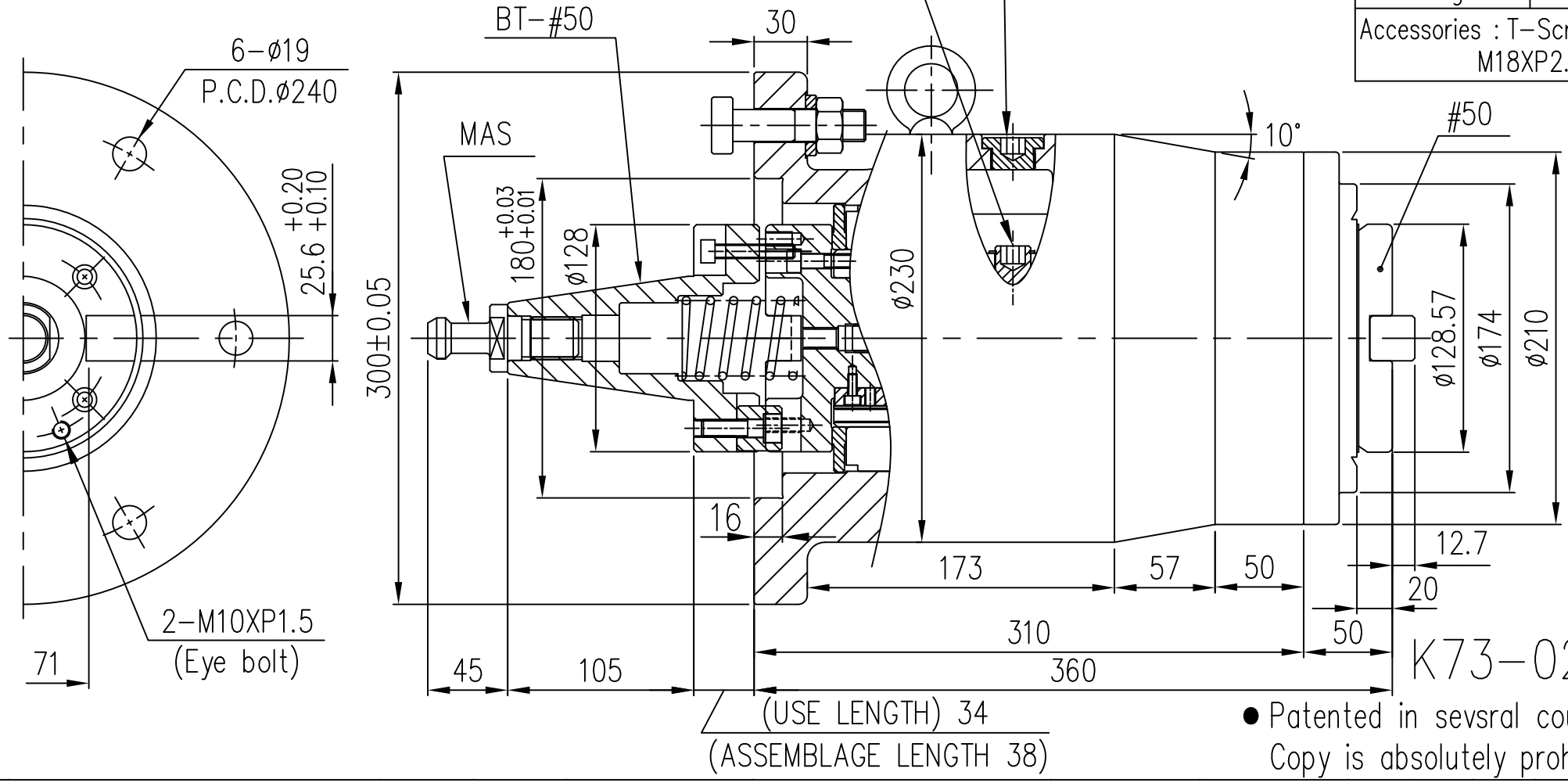

K73-02(E)

● Patented in sevsral countries

Copy is absolutely prohibited.